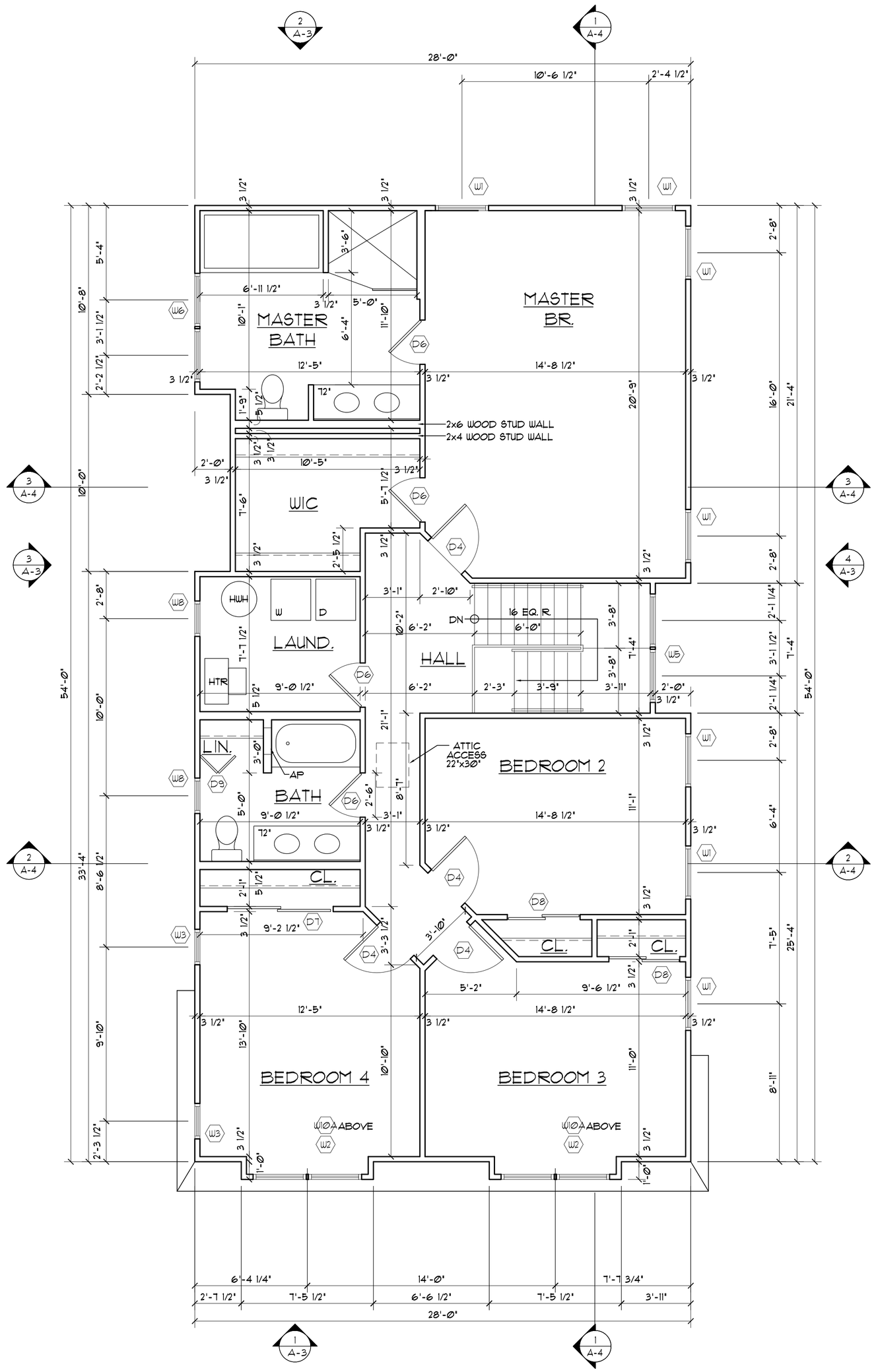

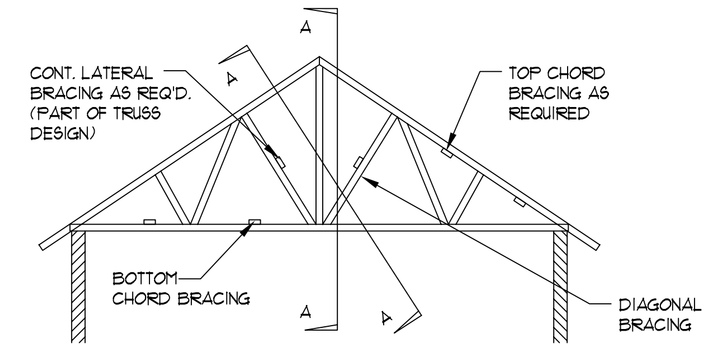

TYPICAL TRUSS ELEVATION

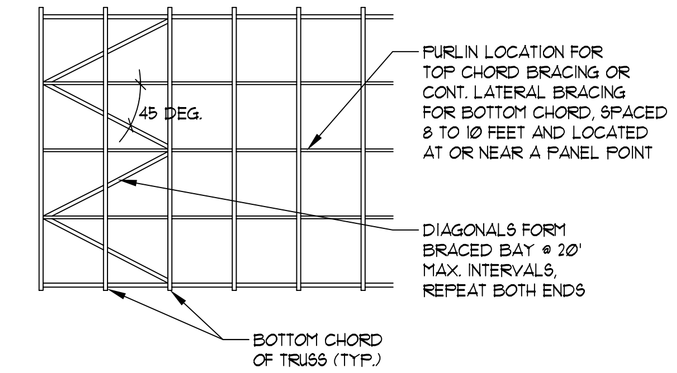

SECTION A-A

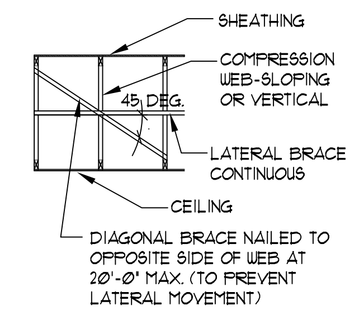

TOP/BOTTOM CHORD BRACING

GENERAL NOTES:

1. WOOD TRUSSES SHALL BE BRACED AND ERECTED IN ACCORDANCE WITH THE "TRUSS PLATE INSTITUTE" STANDARDS. SEE GENERAL NOTE BRACING IN THE PLANE OF WEB MEMBERS.

2.
a. THE TRUSS FABRICATOR SHALL PROVIDE AND LOCATE CONTINUOUS LATERAL BRACING FOR EACH TRUSS WEB MEMBER AS REQUIRED.

b. LATERAL BRACING SHALL BE RESTRAINED BY DIAGONAL BRACING (MIN. 2" THICK NOMINAL LUMBER). THIS BRACING IS TO BE CONTINUOUS.

c. A MINIMUM OF TWO ROWS OF DIAGONAL BRACING IS REQUIRED. ONE AT EACH VERTICAL WEB MEMBER CLOSES TO THE BEARING LOCATIONS.

3. THE BOTTOM CHORD SHALL BE BRACED BY CONTINUOUS LATERAL BRACING SPACED AT 8 TO 10 FEET NAILED TO TOP OF THE BOTTOM CHORD. DIAGONALS PLACED AT 45 DEGREES TO THE LATERAL BRACES SHALL BE LOCATED AT EACH END. IF BUILDING EXCEEDS 60 FEET IN LENGTH, DIAGONAL BRACING SHOULD BE REPEATED AT 20 FOOT INTERVALS.

4. TOP CHORD BRACING:

a. IF PLYWOOD DECKING IS APPLIED DIRECTLY TO TOP CHORD, PROPERLY LAPPED AND NAILED TO DEVELOP DIAPHRAGM ACTION, BRACING IS NOT REQUIRED.

b. IF PURL INS ARE USED, DIAGONAL TOP BRACING IS REQUIRED AT EACH END. IF BUILDING EXCEEDS 60 FEET IN LENGTH, DIAGONAL BRACING SHOULD BE REPEATED AT 20 FOOT INTERVALS.

5. WOOD ROOF TRUSSES ARE TO BE DESIGNED FOR THE WOOD FABRICATOR BY A PROFESSIONAL ENGINEER AND SEALED CALCULATIONS AND DRAWINGS ARE TO BE SUBMITTED FOR REVIEW.

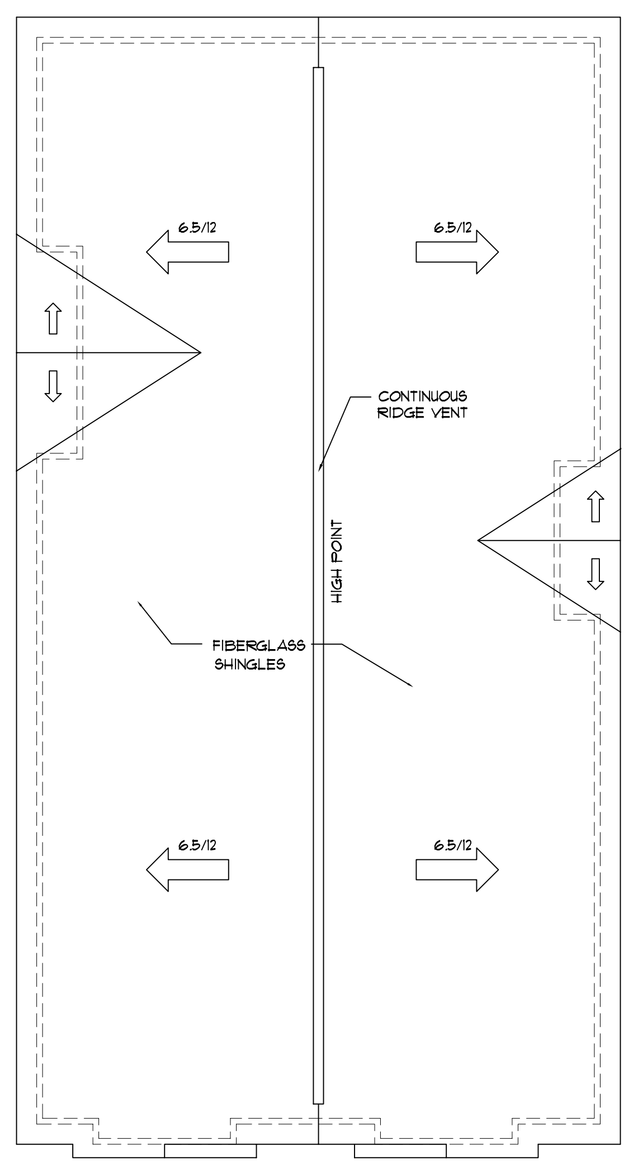

2 A-2 ROOF PLAN 3/16"=1'-0"

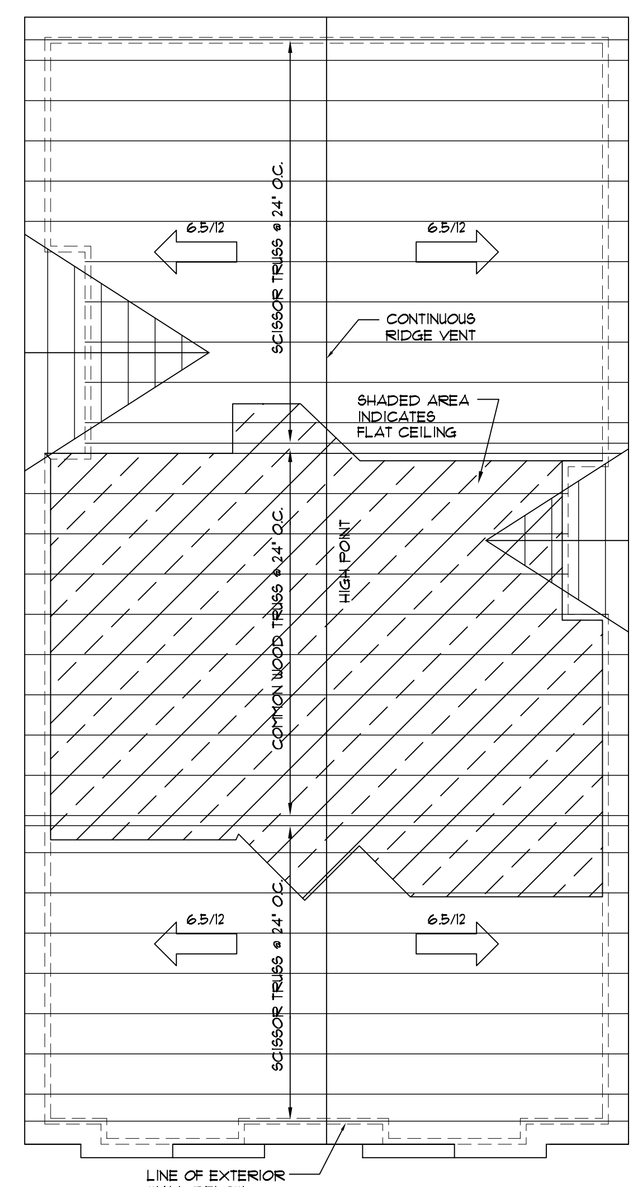

3 A-2 ROOF FRAMING PLAN 3/16"=1'-0"

GARRAMONE ARCHITECTS, LLC
JG
ARCHITECTS / PLANNERS
51 GASKO ROAD
MAYS LANDING, NJ 08330
(609) 476-2977
(609) 476-4425 (FAX)

PROPOSED SINGLE FAMILY RESIDENCE FOR
M. W. MITCHELL, INC.
216 E. NASHVILLE AVE.
WILDWOOD CREST, N.J.

NO.	DATE	REVISIONS

DESIGNED JG
DRAWN BY DA
CHECKED JG
APPROVED JG
SEAL
JOSEPH GARRAMONE, R.A. N.J. AI 08919

SHEET TITLE
THIRD FLOOR PLAN, ROOF PLAN AND ROOF FRAMING PLAN

DATE: 8/18/08
PROJ. NO.: 0730
SCALE: AS NOTED
SHEET NO. A-2